SW#1102
MEASURED VALUES
ARE IN INCHES

ROUTING FORM 98515

Checked
By
T.B.

#1 .3153

#2 .3139

#3 .3133

#4 .3148

#5 .3133

#6 .3134

#7 .3109

#8 .3120

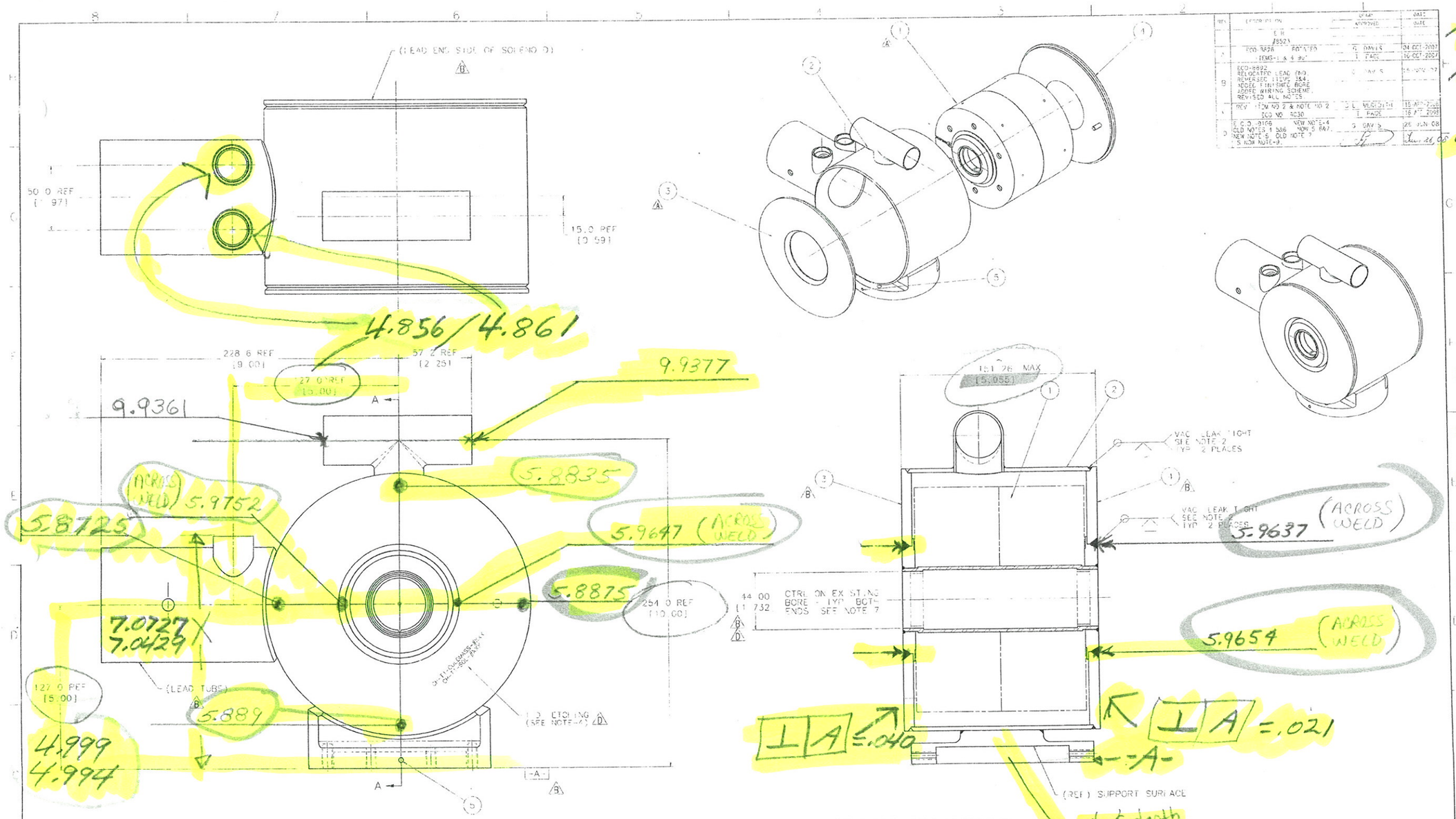

NOTES:

1) A) INSTALL SOLENOID ASSEMBLY INTO LHe VESSEL WITH PROPER LEAD SIDE LOCATION AS SHOWN.
B) ADD END PLATES (ITEMS 3&4) WITH THE PIN OF THE LOCKING PLATE ENGAGING THE LEAD END OF THE SOLENOID ASSEMBLY.
C) WATCH SCRIBE LINES EXIST ON THE PARTS. BUT ALIGNING IS NOT REQUIRED.
D) ROTATE THE SOLENOID ASSEMBLY INSIDE THE LHe VESSEL SO THAT THE LEADS ARE POINTED TOWARDS THE LEAD TUBE, AND POSITION THE SCRIBES TO BE PARALLEL TO THE MOUNTING BLOCK SURFACE (DATUM-A) AS SHOWN.

2) COMPLETE WELDING NOTING THAT ALL WELDS SHALL BE IN ACCORDANCE WITH THE ASME BOILER & PRESSURE VESSEL CODE (EXCEPT AS SHOWN), SECTION VIII, DIVISION 1. THE VESSEL NEED NOT BE CODE STAMPED, BUT SHALL BE CONSTRUCTED PER THE CODE. MAWP 42 PSI 20°C.

3) HI POT ALL COILS TO 1000V AND RUN TEST.

4) He LEAK CHECK WELDED ASSEMBLY PER FERMI SPEC. #CS 0/240.

5) IN PREPARATION FOR COLD MASS TESTING CONNECT THE WINDING OF THE SOLENOID ASSEMBLY WIRES AS SHOWN IN SCHEME AT RIGHT.

6) PERFORM CRYOTEST OF THE COLD MASS IN ACCORDANCE WITH THE TEST REQUIREMENTS.

7) AFTER TESTING THE COLD MASS FINAL MACHINE THE INNER BORE OF THE LHe TUBE AS SHOWN IN THE CROSS-SECTION VIEW.

8) ETCH ID NO'S AT APPROX. LOCATION SHOWN & 4mm MIN. HIGH CHARACTERS, AND RECORD NO'S ON REQUIRED PAPERWORK.

9) CLEAN & PACKAGE PER FERMI SPEC. #CS 0/242.

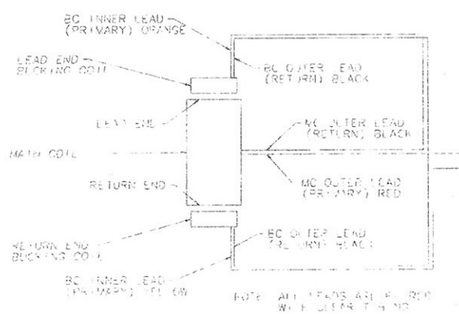

WIRE SCHEMATIC

ITEM	PART NO	DESCRIPTION OR SIZE	QTY
5	VA-3914.56	SET SCR #10-24X3/8" SIN STL	2
4	VD-457117	LOCK PLATE ASSEMBLY	1
3	VE-441949	HE VESSEL END PLATE	1
2	VE-441940	HE VESSEL SUB-ASSEMBLY	1
1	VE-442761	SOLENOID ASSEMBLY	1

PARTS LIST

UNLESS OTHERWISE SPECIFIED X ±.1 XX ±.05 XXX ±.010 ANGLES ±1°	ORIGINATOR	T. TERCHOK ML	
	DRAWN	D. DAVIS	22 JAN 2007
	CHECKED	J. BRANDT	28 JAN 2008
	APPROVED	J. BRANDT	28 JAN 2008
1. BREAK ALL SHARP EDGES .1X45	LOCATION	VD-457134	
2. DO NOT SCALE DRAWING 3. DIMENSIONS SHOWN ARE FOR INSPECTION 4. SEE NL-VACUUM SURFACES 125/	MATERIAL	SEE PARTS LIST	
5. LOCATING LINES ONLY			

FERMI NATIONAL ACCELERATOR LABORATORY
UNITED STATES DEPARTMENT OF ENERGY

HINS - FRONT END
CH-SECTION FOCUSING SOLENOID
TYPE-1 COLD-MASS ASSEMBLY

SCALE 1:1 | DRAWING NUMBER 5520 000-ME-442963 | SHEET 1 OF 1 | REV D

CREATED WITH dessi-2MSeries 1.3SP0.0 TO ACCIS-PRODUCTION DRAWING

9/5/07
(SW#1102)