REV	DESCRIPTION	APPROVED	DATE
	E R		
	E6523		
A	ECO-8826 ROTATED 11LMS-1 & 4 90°	G DAVIS T PAGE	04-OCT-2007 10-OCT-2007
B	ECO-8892 RELOCATED LEAD ENG. REVERSED ITEMS 3&4. ADDED FINISHED BORE. ADDED WIRING SCHEME. REVISED ALL NOTES.	G DAVIS I TERECHKINE	15-NOV 07 16-NOV-07
C	REV ITEM NO 2 & NOTE NO 2 ECO NO 9030	S L MEREDITH T PAGE	3-APR-2008 8-APR-2008
D	ECO-9106 NEW NOTE-4 OLD NOTES 4-5&6 - NOW 5-6&7. NEW NOTE-8, OLD NOTE-7 IS NOW NOTE 9.	G DAVIS I TERECHKINE	26-JUN-08 26-JUN-08
E	REV. ITEM NO 2 ECO NO. 9116	S L MEREDITH T PAGE	5-AUG-2008 13-SEP-2008
F	ECO #9291 REVOVED (±) P S.. CHG'D OUTER LEAD TO INNER	G DAVIS [illegible]	21-JAN-2009 Nov 23, 09

Serial Number: 1113

#1 .3201
#2 .3220
#3 .3195
#4 .3189
#5 .3202
#6 .3208
#7 .3205
#8 .3201

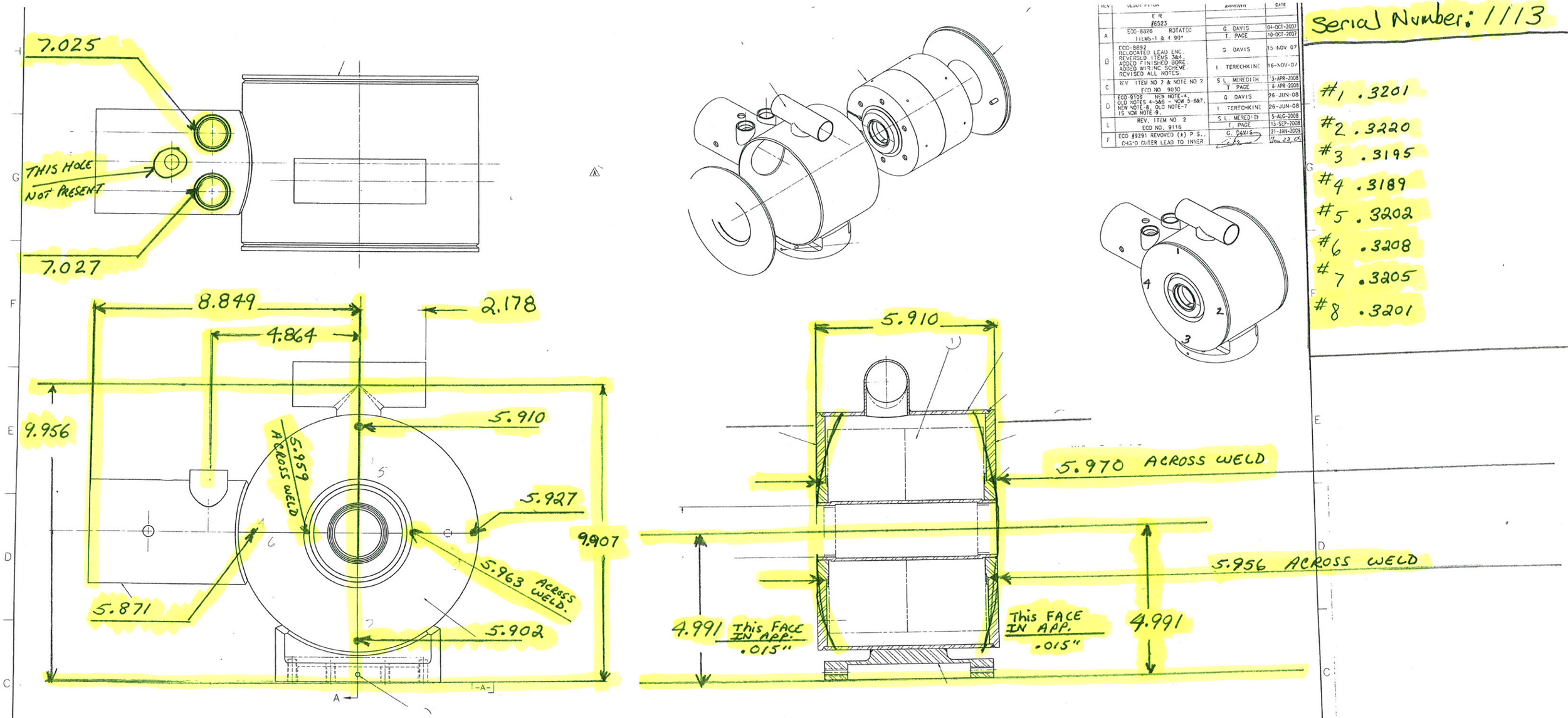

ITEM	PART NO	DESCRIPTION OR SIZE	QTY
5	MA-393436	SET SCR. #10-28X3/8" STN STL.	2
4	MD-457117	LOCK PLATE ASSEMBLY	1
3	ME-441949	HE VESSEL END PLATE	1
2	ME-441940	HE VESSEL SUB-ASSEMBLY	1
	ME-442761	SOLENOID ASSEMBLY	1

PARTS LIST

UNLESS OTHERWISE SPECIFIED	ORIGINATOR	I TERECHKINE	
X XX ANGLES	DRAWN	G DAVIS	27-JUN-2007
± .5 ± .13 ±	CHECKED	J BRANDT	28-JUN-2007
1 BREAK ALL SHARP EDGES MAX	APPROVED	J BRANDT	28-JUN-2007
2 DO NOT SCALE DRAWING 3 STRESSES ARE BASED UPON NONE STRESSED 4 MAX ALL MACH SURFACES 125	USED ON	MD-457134	
5 DRAWING UNITS METRIC	MATERIAL	SEE PARTS LIST	

FERMI NATIONAL ACCELERATOR LABORATORY
UNITED STATES DEPARTMENT OF ENERGY

HINS - FRONT END
CH-SECTION FOCUSING SOLENOID
TYPE-1 COLD-MASS ASSEMBLY

SCALE	DRAWING NUMBER	SHEET	REV
1:1	5520.000-ME-442963	1 OF 1	F

CREATED WITH Idesign2KSeries GROUP TD/DOCIS-DESIGN-COMPUTING

Created 07 57 32 on 22-01-09 (D-M-Y) By gadavis State 1-INITIAL