SN 1101

REV	DESCRIPTION	APPROVED	DATE
	E.R. #8523		
A	ECO-8826 ROTATED ITEMS-1 & 4 90°	G. DAVIS T. PAGE	04-OCT-2007 10-OCT-2007
B	ECO-8892 RELOCATED LEAD END. REVERSED ITEMS 3&4. ADDED FINISHED BORE. ADDED WIRING SCHEME. REVISED ALL NOTES.	G. DAVIS	15-NOV-07
C	REV. ITEM NO.2 & NOTE NO.2 ECO NO. 9030	S.L. MEREDITH T. PAGE	15-APR-2008 16 APR 2008
D	E.C.O.-9106 NEW NOTE-4. OLD NOTES 4 5&6 NOW 5 6&7. NEW NOTE-8, OLD NOTE-7 IS NOW NOTE-9.	G. DAVIS	26-JUN-08 June 26, 08

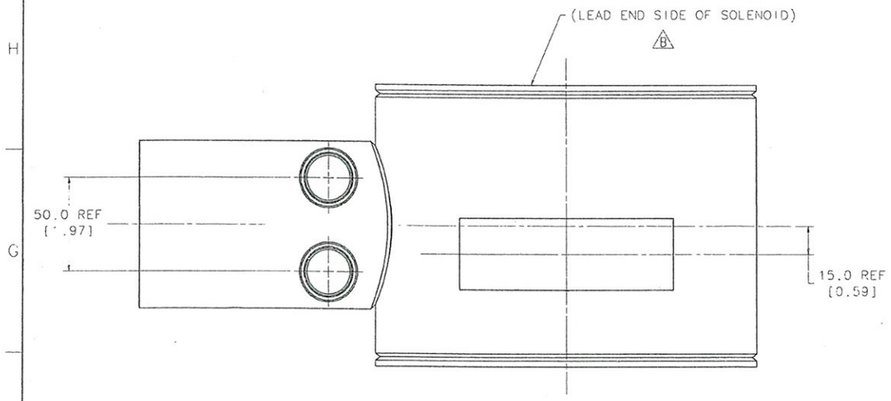

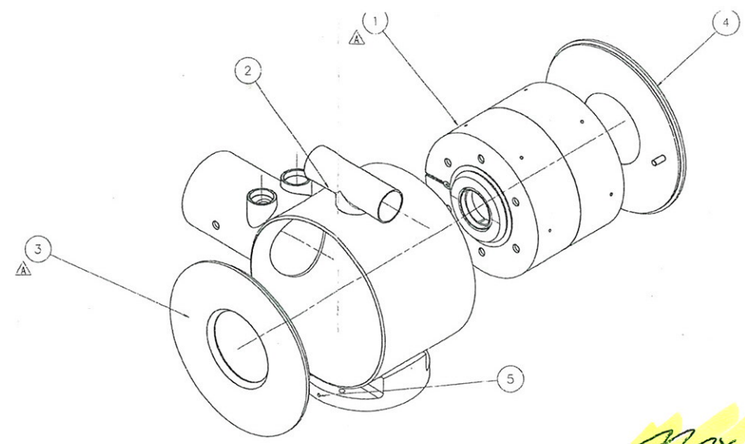

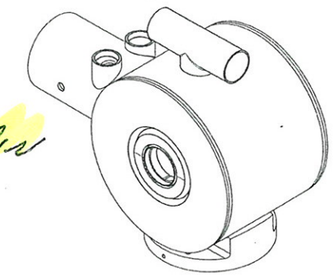

MAX/MIN

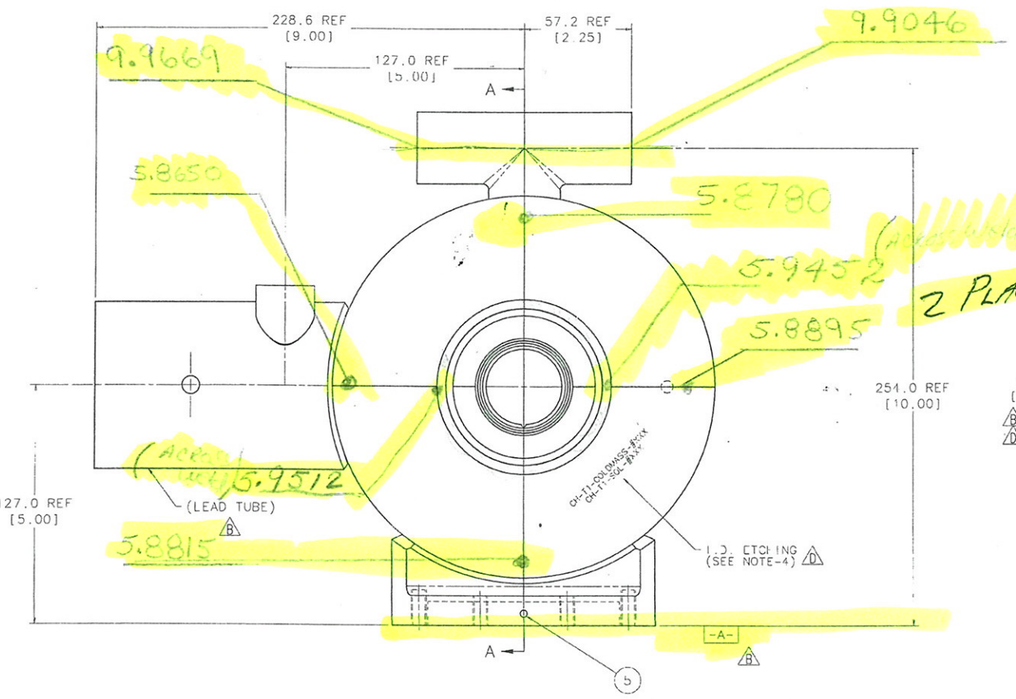

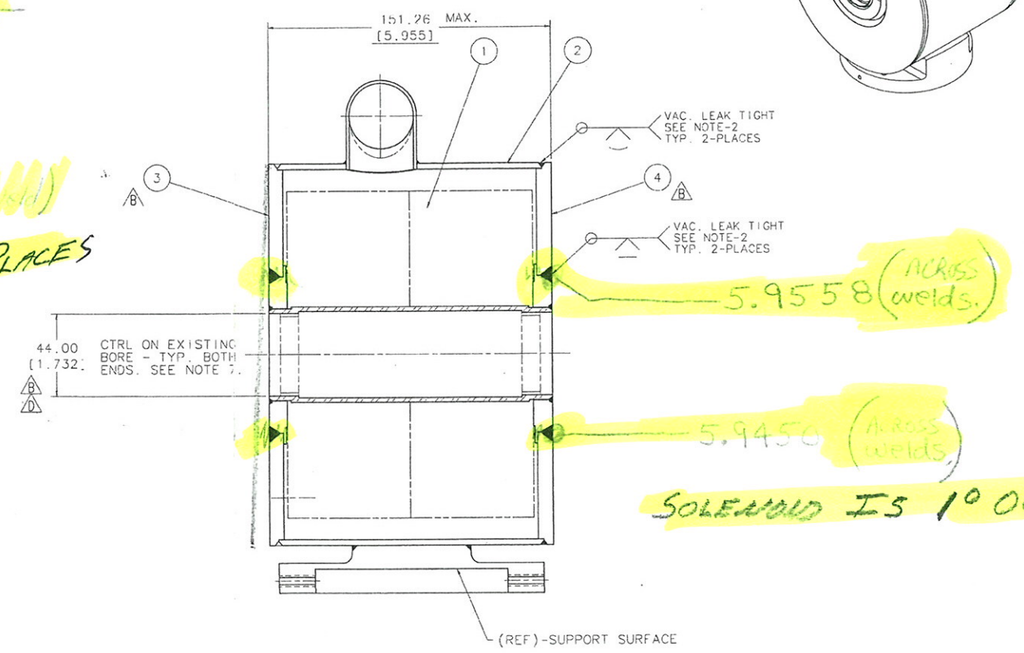

SOLENOID IS 1° OUT OF PARALLEL TO BASE

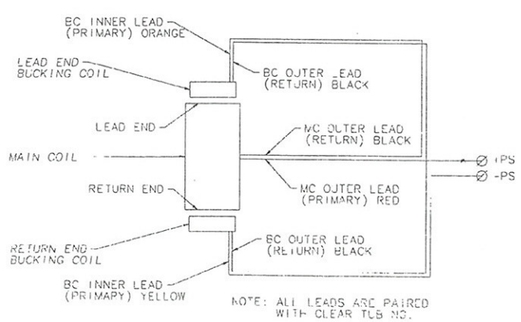

NOTE: ALL LEADS ARE PAIRED WITH CLEAR TUB NO.

WIRE SCHEMATIC B

NOTES: B D

1. A) INSTALL SOLENOID ASSEMBLY INTO LHe VESSEL WITH PROPER LEAD SIDE LOCATION AS SHOWN.
   B) ADD END PLATES (ITEMS 3&4) WITH THE PIN OF THE LOCKING PLATE ENGAGING THE LEAD END OF THE SOLENOID ASSEMBLY.
   C) MATCH SCRIBE LINES EXIST ON THE PARTS, BUT ALIGNING IS NOT REQUIRED.
   D) ROTATE THE SOLENOID ASSEMBLY INSIDE THE LHe VESSEL SO THAT THE LEADS ARE POINTED TOWARDS THE LEAD TUBE, AND POSITION THE SCRIBES TO BE PARALLEL TO THE MOUNTING BLOCK SURFACE (DATUM-A) AS SHOWN.
2. C) COMPLETE WELDING NOTING THAT ALL WELDS SHALL BE IN ACCORDANCE WITH THE ASME BOILER & PRESSURE VESSEL CODE (EXCEPT AS SHOWN), SECTION VIII, DIVISION 1. THE VESSEL NEED NOT BE CODE STAMPED, BUT SHALL BE CONSTRUCTED PER THE CODE. MAWP: 42 PSI 20°C.
3. HI-POT ALL COILS TO 1000V. AND RING TEST.
4. He LEAK CHECK WELDED ASSEMBLY PER FERMI SPEC. #ES 10724C.
5. IN PREPARATION FOR COLD MASS TESTING CONNECT THE WINDING OF THE SOLENOID ASSEMBLY WIRES AS SHOWN IN SCHEME AT RIGHT.
6. PERFORM CRYOTEST OF THE COLD MASS IN ACCORDANCE WITH THE TEST REQUIREMENTS.
7. AFTER TESTING THE COLD MASS - FINAL MACHINE THE INNER BORE OF THE LHe TUBE AS SHOWN IN THE CROSS-SECTION VIEW.
8. ETCH I.D. NO'S AT APPROX. LOCATION SHOWN IN 4mm MIN HIGH CHARACTERS, AND RECORD NO'S ON REQUIRED PAPERWORK.
9. CLEAN & PACKAGE PER FERMI SPEC. #ES-10722

PRIMARY DIMS ARE IN MM MM[IN].

ITEM	PART NO.	DESCRIPTION OR SIZE	QTY.
5	MA-393436	SET SCR. #10-28X3/8" STN. STL.	2
4	MD-457117	LOCK PLATE ASSEMBLY	1
3	ME-441949	HE VESSEL END PLATE	1
2	ME-441940	HE VESSEL SUB-ASSEMBLY	1
1	ME-442761	SOLENOID ASSEMBLY	1

PARTS LIST

UNLESS OTHERWISE SPECIFIED	ORIGINATOR	T. FERCHEKINE	
.X .XX ANGLES	DRAWN	G.DAVIS	27-JUN-2007
± .5 ± .13 ±	CHECKED	J.BRANDT	28-JUN-2007
1. BREAK ALL SHARP EDGES MAX.	APPROVED	J.BRANDT	28-JUN-2007
2. DO NOT SCALE DRAWING 3. ETCHING PACED UPON ASME Y14.5M-1994 4. MAX. ALL WORK SURFACES 125	USED ON	MD-457134	
5. DRAWING UNITS: MM/INS	MATERIAL	SEE PARTS LIST	

FERMI NATIONAL ACCELERATOR LABORATORY
UNITED STATES DEPARTMENT OF ENERGY

HINS - FRONT END
CH-SECTION FOCUSING SOLENOID
TYPE-1 COLD-MASS ASSEMBLY

SCALE	DRAWING NUMBER	SHEET	REV
1:1	5520.000-ME-442963	1 OF 1	D

CREATED WITH deas12NXSeries GROUP: TD/DOCUS-DESIGN-COMPUTING

Created: 13:11:15 on 28-06-08 (D-M-Y) By: gadavis State: 1-INITIAL