REV	DESCRIPTION	DRAWN / APPROVED	DATE / DATE
	ECR 9978 NEW RELEASE		

PSQA001-PSQA006

APPLICATION | Date 9/7/11

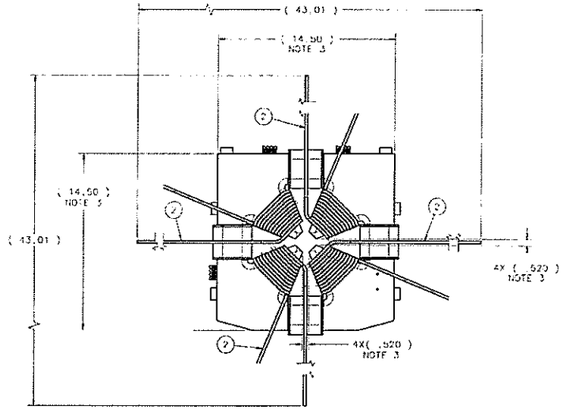

STEP 1: INITIAL ASSY.
SCALE 1/4

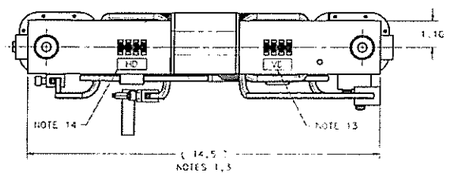

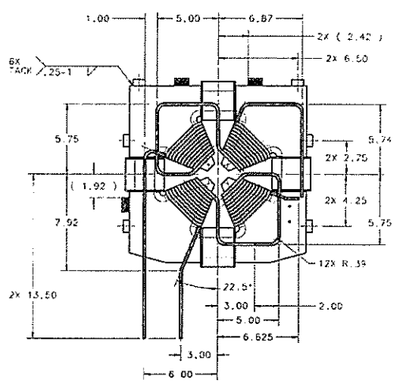

STEP 2: LEAD BENDS
SCALE 1/4

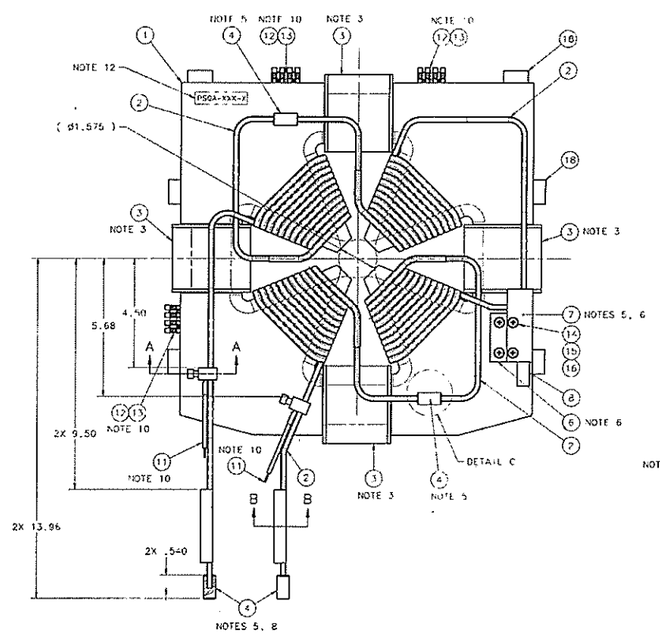

STEP 3: FINAL ASSY.

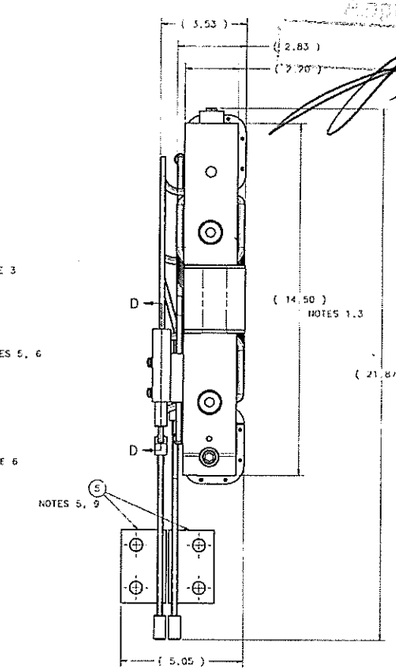

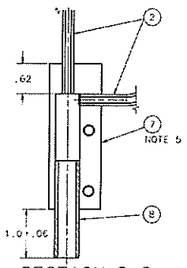

SECTION D-D
SCALE 1/1

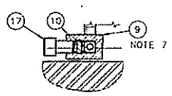

SECTION A-A
SCALE 1/1
2 PLACES

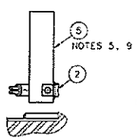

SECTION B-B
SCALE 1/1
2 PLACES

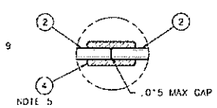

DETAIL C
SCALE 1/1
2 PLACES

NOTES (UNLESS OTHERWISE SPECIFIED)

1. MEASURE AND RECORD THE VERTICAL AND HORIZONTAL CORE CROSS SECTION DIMENSIONS (MAKE SURE THERE IS NO GAP BETWEEN CORE QUARTERS IN THE PARTING PLANE).
2. DIS-ASSEMBLE ITEM #1.
3. ASSEMBLE COILS #2 AND #3 WITH THE CORE QUARTERS, ITEM #1 AS SHOWN IN "STEP 1". ALL COIL LEADS SHALL BE ON THE SAME END OF MAGNET. LEADS OF THE DIPOLE COILS, ITEM #3, SHALL BE FACED OUTSIDE THE MAGNET, AS SHOWN. GLUE ALL COILS TO THE CORE QUARTERS WITH NOOMEX FILLED EPOXY (REMOVE THE CORE MATING SURFACES FROM EPOXY). NO GAPS BETWEEN CORE QUARTERS IN THE PARTING PLANE ALLOWED (ONCE ASSEMBLED, THE VERTICAL AND HORIZONTAL CORE CROSS SECTION DIMENSIONS MUST MATCH THE MEASUREMENTS PER NOTE 1). VERIFY THAT THE GAPS BETWEEN THE PART TYPES ARE THE SAME WITHIN .002".
4. BEND LEADS OF QUADRUPOLE COILS WITH R.5", AS SHOWN IN "STEP 2". TRIM THE LEADS, AS NEEDED, AND PREPARE THEM FOR BRAZING.
5. SPLICE THE LEADS OF QUADRUPOLE COILS BY BRAZING OF COIL CONNECTORS, ITEM #4, AND MANIFOLD BLOCK, ITEM #7, WITH SIL-FOS 15, ITEM #19. BRAZE FLAGS, ITEM #5 WITH SIL-FOS 15, ITEM #19.
6. ALL WATER JOINTS MUST BE WATER LEAK TIGHT (500 PSI FOR 30 MIN). WATER FLOW THROUGH EACH TWO COILS (SUPPLY IN THE MANIFOLD BLOCK, ITEM #7, AND RETURN FROM CONNECTOR, ITEM #4) SHALL BE GREATER THAN 0.55 GPM AT 60 PSI TO 70 GPM AT 100 PSI). CLAMP MANIFOLD BLOCK ITEM #7, TO THE CORE, USING INSULATOR BLOCK, ITEM #6.
7. SOLDER SENSOR CLAMPS, ITEM #9, TO QUADRUPOLE COIL, ITEM #2, WITH TIN SOLDER, ITEM #22, AS SHOWN.
8. INSULATE QUADRUPOLE COIL LEADS WITH TWO LAYERS HALF LAP OF ADHESIVE BACKED FIBERGLASS TAPE, ITEM #21, AND PAINT WITH EPOXY PAINT (GLOSS WHITE, ITEMS #23 AND #24).
9. SILVER PLATE BOTH OUTSIDE SURFACES OF THE FLAGS, ITEM #5, W/ IN ITEM #19.
10. INSTALL TERMINAL BLOCKS, ITEM # 12, AS SHOWN. CONNECT DIPOLE COIL LEADS TO THE UPPER TERMINAL BLOCKS TO CREATE VERTICAL AND HORIZONTAL DIPOLES (PER AN ENGINEERS INSTRUCTION). INSTALL KLIXON SENSORS, ITEM #11, IN THE SENSOR CLAMPS, ITEM #9, USING INSERT, ITEM #10 AND SCREW, ITEM #17. CONNECT SENSOR'S LEADS TO THE SIDE TERMINAL BLOCK.
11. HIPOT ALL COILS TO THE CORE AND TO EACH OTHER WITH 500 V (CURRENT LEAKAGE SHALL NOT EXCEED 5uA).
12. STENCIL SERIAL NUMBER: PSQA-XXX-X, IN 1/2" HIGH CHARACTERS IN THIS LOCATION, USING ITEM #26.
13. STENCIL "VE" IN 1/4" HIGH CHARACTERS IN THIS LOCATION, USING ITEM #25
14. STENCIL "HO" IN 1/4" HIGH CHARACTERS IN THIS LOCATION, USING ITEM #25
15. REFERENCE COIL WINDING FIXTURES, MB-482613 AND MB-482619.

ITEM	PART NO.	DESCRIPTION OR SIZE	QTY.
25	MA-331911	PAINT-WHITE ENAMEL	A/R
24	MA-274445	EPOXY PAINT - AQUAPON CATALYST	A/R
23	MA-274444	EPOXY PAINT GLOSS-POLYAMIDE	A/R
22	MA-393381	1/8" DIA TIN-SILVER SOLDER WIRE	A/R
21	MA-225104	FIBERGLASS ADHESIVE TAPE	A/R
20	MA-225557	COOL AMP SILVER PLATING POWDER	A/R
19	MA-116556	SOLDER - SILFOS 15 SILVER	A/R
18	MA-393962	MAGNET NEST BALL TARGET Ø1"X 5"	6
17	MA-482549	SCR SHC 1/4-20 X 3/8" LG SS	2
16	MA-482548	SCR-PHH #10-24 X 1-1/4" LG SS	4
15	MA-393798	FLAT WASHER #10 X .438 X .035THK	4
14	MA-393797	STD LOCK WASHER NO.10 SS	4
13	MA-482547	SCR-PHH #0-80 X 3/4" SS	6
12	MA-482551	TERMINAL BLOCK	3
11	MA-393961	TEMPERATURE SENSOR-KLIXON	2
10	MB-482612	SENSOR INSERT	4
9	MB-482611	SENSOR CLAMP	2
8	MB-482610	MANIFOLD BLOCK INSERT	1
7	MB-482609	MANIFOLD BLOCK	1
6	MB-482608	INSULATOR BLOCK	1
5	MB-482607	FLAG PLATE	2
4	MB-482606	GLAD COIL CONNECTOR	4
3	MB-482603	DIPOLE COIL	4
2	MD-482602	QUADRUPOLE COIL	4
1	MD-482600	CORE ASSEMBLY	1

PARTS LIST

UNLESS OTHERWISE SPECIFIED	SIGNATURE		DATE
	DRAWN	A.NAKAMOV	25-FEB-2011
	CHECKED	J.KUSNAT	28-FEB-2011
	APPROVED	A.Nakamov	28-APR-2011
			9/7/11

1. BREAK ALL SHARP EDGES
2. DO NOT SCALE DRAWING. DIMENSIONS ARE UPDATED AS NEEDED.
3. MAT'L NO MADE CLEANCES

DRAW NO SHEET INCH

SIZE DIN MD-482590

MATERIAL SEE PARTS LIST

FERMI NATIONAL ACCELERATOR LABORATORY
UNITED STATES DEPARTMENT OF ENERGY

LINAC
PSQA MAGNETS
SINGLE QUADRUPOLE MAGNET ASSY

SCALE 1:2.5 AS NOTED | DRAW NO NUMBER 5520.000-ME-482591 | SHEET 1 OF 1 | REV

CREATED WITH MicroCAD Services | GROUP TD-DOES-DESIGN-COMPUTING

Created: 17:03:15 on 09-01-11 (D-M-Y) By: akmad State: 1-INIT.AL