SN 1101 "Revised"

REV	DESCRIPTION	DRAWN	DATE
	E.R. #9290	APPROVED	DATE

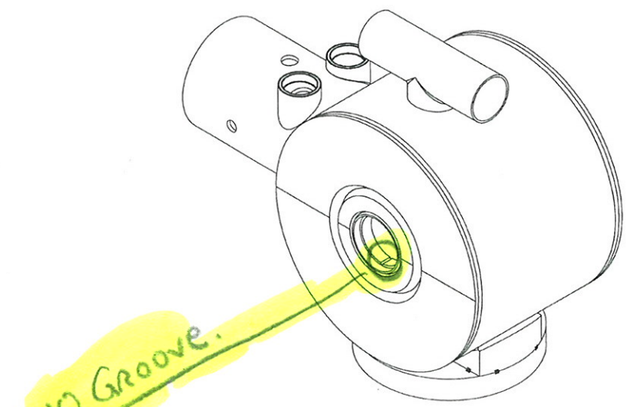

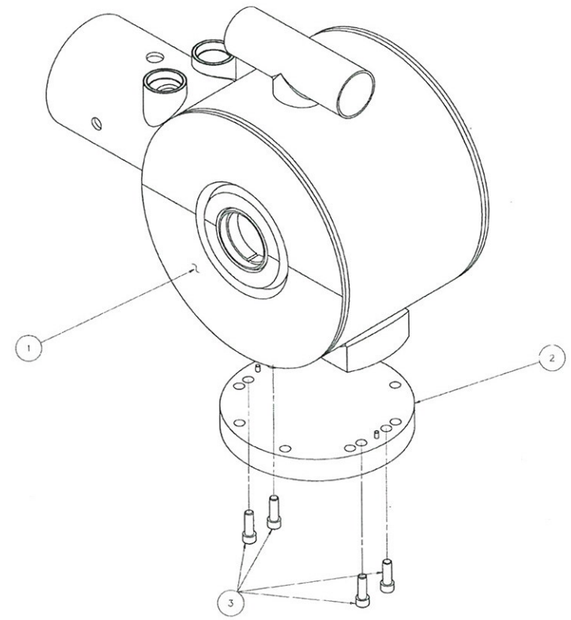

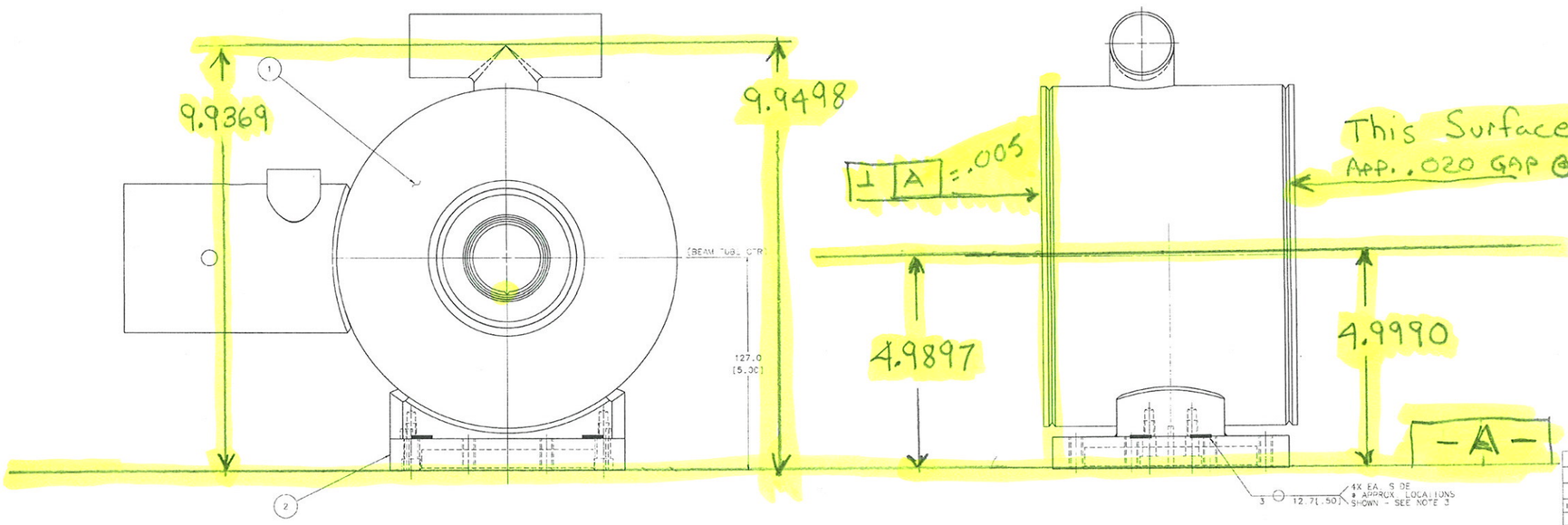

ITEM	PART NO.	DESCRIPTION OR SIZE	QTY.
3	COVL	1/4"-20x3/4" LG. S.H.C.S. 18 8SS	4
2	MC-459435	BASE TO POST ADAPT ASSY	1
1	ME-459434	CM ASSY - REPAIR MACHINING	1

PARTS LIST

UNLESS OTHERWISE SPECIFIED: X / XX / ANGLES; ± 2.3 / ± / ±	CRITINATOR	T.PACE
	DRAWN	G. DAVIS — 12-DEC-2008
	CHECKED	17 DEC 08
1. BREAK ALL SHARP EDGES MAX	APPROVED	17-DEC-2008
2. 20:301 SCALE DRAWING. 3. DIMENSIONED PER ASME Y14.5M-1994 4. MAX. RA. 125 MICRO INCHES	USED ON	
5. DRAWING UNITS MILLIMETERS	MATERIAL	SEE PARTS LIST

FERMI NATIONAL ACCELERATOR LABORATORY
UNITED STATES DEPARTMENT OF ENERGY

HINS - FRONT END
CH-SECT. T-1 COLD MASS ASSY
COLD MASS REPAIR ASSY

SCALE	DRAWING NUMBER	SHEET	REV
1:1	5520.000-ME-459433	1 OF 1	

CREATED WITH Ideas12NXSeries GROUP: TD/DDCIS-DESIGN-COMPUTING

NOTES (UNLESS OTHERWISE SPECIFIED):
1) DIMENSIONS ARE IN MILLIMETERS; DIMENSIONS IN [.XX] ARE IN INCHES
2) SPOT WELDS TO BE PERFORMED AFTER INSERT ON AND TORQUING OF ITEMS #3 TO THE FOLLOWING: 10.74 Nm [95 LB-IN].
3) CLEAN AND PACKAGE PER FERMI ENGR. SPEC. ES-107222

Created: 10:33:32 on 19-12-08 (D-M-Y) By: gadavis State: 1-INITIAL